NEWSLETTER

EFEE

In this edition:

The first using of gunpowder in Banska Štiavnica

Appropriate management of preventing actions on health and safety

Testing on resistance to hydrostatic pressure according to SREN 13631-6

Drill & blast wizardry in Australia

...and more!

NEWSLETTER

May 2017

This Newsletter contains the above articles (Click on the headings to jump to the article)

We in EFEE hope you will enjoy the present EFEE-Newsletter. The next edition will be published in September 2017. Please feel free to contact the EFEE secretariat in case:

- You have a story you want to bring in the Newsletter
- You have a future event for the next EFEE Newsletter upcoming events list
- You want to advertise in a future Newsletter

Or any other matter.

Jari Honkanen, Chairman of Newsletter Committee and the Vice President of EFEE

Teele Tuuna, Editor of EFEE Newsletter, newsletter@efee.eu

EFEE SECRETARY GENERAL
ROGER HOLMBERG JÄRNGRUVEVÄGEN 6618 92
KOLMÅRDEN, SWEDEN
newsletter@efee.eu
www.efee.eu

EFEE

Dear EFEE members, the President´s voice

Gradually we have arrived at the fifth month of this year as well as at the second issue of our EFEE Newsletter. The time is running very quickly and we should stop it for a while and briefly emphasize the most important events in our federation for this year 2017. Some of these events are already over but the others, including the most important event the 9th EFEE World Conference, are still waiting for us.

This year 2017 we started with an EFEE Board meeting on 25Th March 2017 which took place in Coimbra in Portugal. The Board meeting in Coimbra was mainly focused to the organization of our forthcoming 9th EFEE World Conference which will take place in Stockholm - the capital of Sweden from 10th to 12th September 2017. Sufficient attention we have also paid to the organization of the 10th EFEE World Conference which will take place in Helsinki - the capital city of Finland in 2019. At the same time we have decided to start the process of selection of the place and country which will be hosting the 11th EFEE World Conference in 2021. We have already asked over the email all our National Association members to indicate for us their preliminary interest.

During our Council meeting in Stockholm on 9th of September we will take the final decision in this matter and we will elect the place and country which will be hosting the 11th EFEE World Conference in 2021.
- In the beginning of August 2016 we obtained very good news from Sweden that our application for our PECCS project (Pan-European Competency Certificate for Shotfirers/ Blast designers by European Federation of Explosives Engineers) was approved for funding from the Swedish Erasmus plus programme.

We are really happy that since this happened the PECCS project moves steadily ahead as scheduled. The project has 8 partners: Estonia, Sweden, Norway, Portugal, Germany, United Kingdom, Romania and France. The kick-off meeting took place in October 2016 in Oslo. The latest meeting of the whole group took place in Coimbra from 23rd to 24th March 2017. An official website of this project has been established (www.shotfirer.eu) where you can find out all the relevant and important details. At the same time we have written a letter to all National Associations about the PECCS project regarding the subject of the future of the explosives shotfirer profession in the European Union, in the hope of their support.

The outcomes of this project: the materials with examining questions, exercises, the course based on these materials and the online courses, will be available on the internet for free on www.shotfirer.eu . In order to maintain a good quality and appropriate educational outcome of the courses we will create a Guidebook based on the learning material for trainers and shotfirers who want to learn independently online. We have to repeatedly emphasize that this project is funded by European Commission under the Erasmus+ programme.

The next EFEE Board and Council meeting will take place in Stockholm, Sweden on 8th and 9th September in the same place where a couple of days later the 9th EFEE World Conference on Explosives and Blasting will be held from 10th to 12th September 2017. The 9th EFEE World Conference on Explosives and Blasting 2017 will take place at the Brewery - Conference Centre Stockholm, a short walking distance from city centre. The Conference will start on Sunday 10th September with registration, workshop and welcome reception and will continue on Monday 11th September and Tuesday 12th September with technical sessions and exhibition.

The Gala dinner is planned for Monday evening and will take place at Winterviken in former Alfred´s Nobel factory.

I´m really looking forward to meet you all in Stockholm from 10th - 12th September 2017. For more detail information as well as for conference registration please visit the website www.efee2017.com.

Except the regular EFEE Board meetings, Council meetings and Annual General Meeting our federation also participates in meetings with the Notified Bodies for Explosives as well as on meetings with the Explosives Working Group. EFEE is regularly represented in both types of meetings by Jörg Rennert who makes a great work for our federation in this area. The meeting of Notified Bodies for Explosives takes place from 10th to 12th May 2017 in Krakow, Poland and the meeting with the Explosives Working Group will be organized during the autumn 2017.

Finally please do not finish reading our May Newsletter edition with my foreword but kindly continue to read all the interesting articles prepared especially for you in this newsletter.

Igor Kopal, President of EFEE

EFEE

9th WORLD CONFERENCE
THE BREWERY,
STOCKHOLM, SWEDEN

BERG SPRÄNG NINGSKOMMITTEN

STOCKHOLM 2017

10th – 12th September

The World Conference on Explosives and Blasting is an excellent platform for becoming familiar with the current developments in the blasting sector.

Stockholm provides an excellent arena for experts from all over the world to extensively exchange their experiences in the home of Alfred Nobel.

The conference includes:

- Large Industry Exhibition
- Technical Programme Featuring
  - Blast vibrations
  - Explosives
  - Blasting experiences.
  - Demolition etc
  - Instrumentation
- Partner Programme
- Industry Specific Workshops
- Gala Dinner at Alfred Nobel's Factory

Important Dates:

- Call for Papers - Abstract Deadline Friday 10 February 2017
- Early Bird Registration - February to July 2017

Sponsored by

EPC GROUPE · FORCIT · International Society of Explosives Engineers · Lubrizol · ORICA · YARA

For further details visit www.efee2017.com
or email info@efee2017.com

[BACK TO TOP]

The first using of gunpowder in Banská Štiavnica (Schemnitz) mining area (Slovakia) (390th anniversary of the success of Banská Štiavnica mining).

Banská Štiavnica mining area of the first half 17th century:

- was characterized by rapid changes of boom and decline.
- by the end of the 16th century „Upper Bieber Gallery" occupied among mining companies of Banská Štiavnica such an important place so much that influenced economic state of mining in the entire mining district there.
- this status of „Upper Bieber Gallery" is preferably characterized by record of Banská Štiavnica´s Mining Court dated from year 1607 according to which Banská Štiavnica is mother of seven mining cities and „Upper Bieber Gallery" is the most important mining company in Banská Štivanica.

Seven central Slovakian mining cities: Banská Štiavnica, Banská Belá, Banská Bystrica, Kremnica, Ľubietová, Nová Baňa, Pukanec.

Fig. 1. Upper Bieber Gallery

Work of miner in this time of period did not differ from work of miner in the middle ages, except the pick and hammer the basic tools of miner they have used shovels and hoes, which were used in hard rocks.

Basic tools of a miner:

Fig. 2. Pick and hammer

This hard work and heavy work they facilitated by using of simple aid tools like for example: beech wedges, fire and gunpowder.

Fig. 3. Beech wedge

This system of extraction was based on the procedure that in the gallery were hollowed out the holes which were set with beech wedges. These beech wedges were systematically poured with the water what resulted into the expansion of beech wedges which subsequently disintegrated the rock.

The essence of this work was that the solid rock was exposed to effect of fire. This resulted into the heating up of the rock and at subsequent cooling has occurred gradual disintegration, individual parts were separated and it was much easier to remove them by the mechanical way.

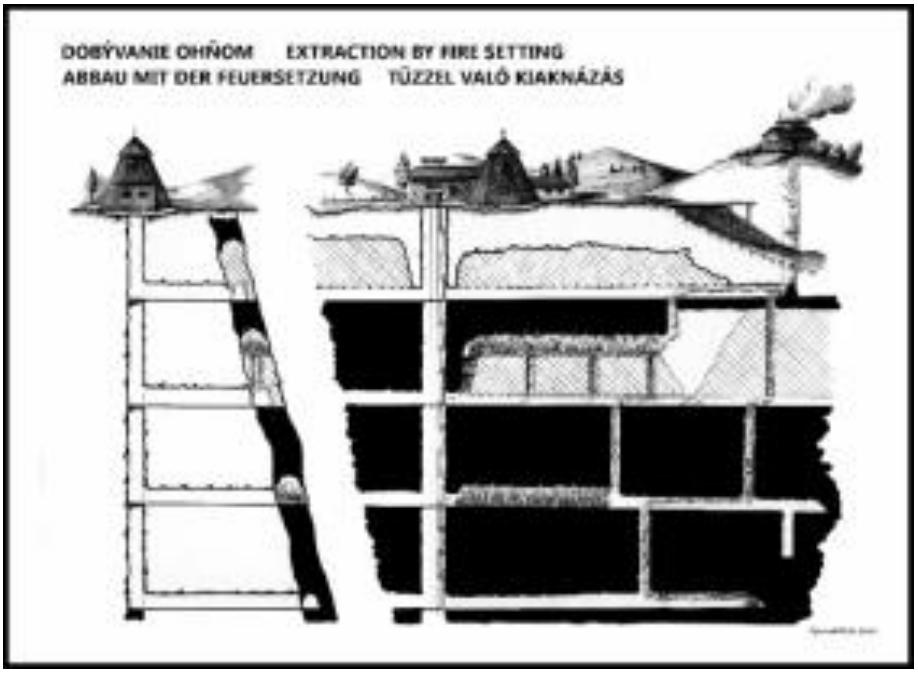

Fig. 4. Extraction by fire setting

Fig. 5. Rabenstein Hodruša-Hámre – example of extraction by fire setting

Gunpowder

For the future technical development of mining was the most important introduction of excavation method by blasting of rocks with gunpowder.

Fig. 6. and 7. Protocol of Banská Štiavnica Mining Court about the first blast in the underground mine

How appeared the idea to use gunpowder…?

According to Péch the idea to use gunpowder in mining was born by the earl Montecuccoliho, who married into the Banská Štiavnica. In the mines where he become co-owner he started to apply experiences he knew during the military campaigns. Kaspar Weindl was probably military miner and served in the army of the earl Montecuccoli.

On 8th February 1627 Tirolian soldier Kaspar Weindl realized the first trial blast of rock by using of black gunpowder (gunpowder) for the purpose to determine the knowledge about its effect. It was realized in the most important mining company of that time in Banská Štivanica - in the Upper Bieber Gallery in ditch Daniel. The result of the trial blast was verified by members of mining companies and representatives of Banská Štiavnica Mining Court what can be testified by protocol recorded at this occasion. So it was the first regular trial blast of rock documented by the committee of the experts which resulted into the revolution in the mining technology of that times and has spread from Banská Štivanica around the whole world.

What is the gun (black gun) powder?

Black gunpowder was produced from potassium saltpetre (sanitra), sulphur and charcoal which was for this purpose specially produced from aspen and poplar wood.

The composition of gunpowder was changing according to the purpose for which the gunpowder was intended to be used. Unfortunately we do not know the exact composition of the black powder used for mining purposes at that times. We do know only its composition for military purposes. General Hester concluded an agreement on 8th January 1709 with powder producers from Banská Bystrica for delivery of 150 pounds (pound resp. phunt is older weight unit 0,56 kg) of gunpowder which has a following composition:

> For one cent (older weight unit 61,724 kg) of sanitra was used 16 pounds of sulphur and 16 pounds of charcoal. Percentage ration was: 75,75 % KNO3, 12,125 % S, 12,125 % C.

What happens at firing of gunpowder?

At firing of gunpowder is generated approximately 43 % of gas fumes and approximately 57 % of solid fumes which are the reason of the fume showing after the burning. The fumes are gaining by the reaction temperature enormous tension and thus cause the blasting effect.

Individual compounds of gunpowder:

Fig. 8. Sanitra

Fig. 9. Sulphur

Fig. 10. Charcoal

Characteristic features of good black powder were following:

- The same size of grains
- Hard grains which creaked at the mutual friction
- Could not be powdery. The test was done so that the powder was spilt on the paper and if the paper was not blurred was considered to be of high quality.
- Black powder had to be dry. By drying of wet black powder were not obtained expected features and therefore it had to be submitted to powder producers for reprocessing. Therefore sufficient attention had to be payed to storage of black powder.

Production of black powder in Slovakia was concentrated to three areas. In the east of Slovakia it was in city Bardejov, in the central Slovakia it was in city Bystrica and in neighbour city Radvaň a in the west of Slovakia it was in city Bratislava.

We can conclude on production of black powder in Bratislava from records coming from heritage of Bratislava´s citizen Eghensseldera where is manuscript of master Samuela which was mentioning it *„wie man pulver aus saliter machen soll*." – „how to make a powder from salitra".

Central magazines – powder storages

For storage of the black powder were built up a special storages out of residential area mainly just to minimize prospective damages resulting from accidental explosion. Typical building of the central powder storage is for instance the building situated on Dolná Roveň near the road from Banská Štiavnica to Štiavnické Bane which was built in seventies years of 18th century. The interest of this building is that the thickness of some walls reached 165 cm.

Fig. 11. Powder storage – central magazine

Already in years 1781-83 were enforced measurements to provide all the powder storages with lightning conductor. The oldest ones were introduced with copper ball from which the spikes protruded in all directions.

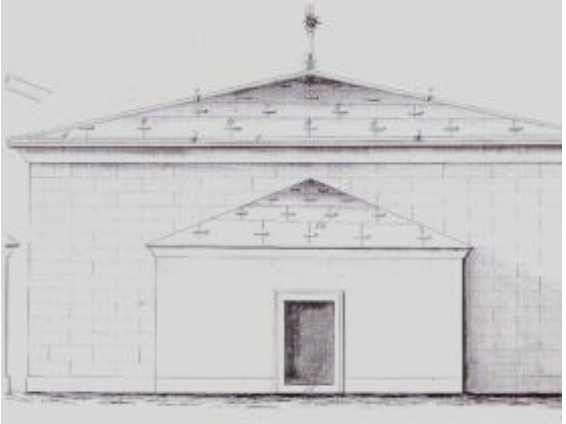

Fig. 12. Powder storage with lightning conductor

Conclusion:

Introduction of black gunpowder usage for rock blasting in the underground mining resulted into the revolution in mining technology which was necessary to properly adopt for its subsequent spreading into the whole mining world.

Literature:

Jozef Gindl, RUDY, professional journal of ore mining, year V number 2, Praha 1957.

Foto: Ing. Lubomír Lužina, archive of SBM (Slovak mining museum).

Ing. **Ondrej Michna,** Slovenské banské múzeum.

Slovak mining museum, Banská Štiavnica.

APPROPRIATE MANAGEMENT OF PREVENTING ACTIONS AN HEALTH AND SAFETY FOR TESTING ACTIVITIES OF HIGH EXPLOSIVES IN CONFINED ENVIRONMENT

Abstract

The specific activities of testing civil use explosives in test ground presume a significant risk level for health and safety of the operating personnel and even for other people situated in the area. The preparing operation of the explosive charges, the priming of them in confined environment their detonation should be mode by taking in count a series of factors which can generate uncommanded explosion risk of the exposed personnel. In the paper is presented the assessment of the applicable safety measures at two testing technical facilities for the high explosives, tested confined in steel pipes.

The mass in confined environment (in steel pipe) is characteristic for high explosives with low sensibility to the initiating impulse from detonators with initiation capacity no.8, as example ANFO type explosives mixtures.

The high of the explosive charges is up to 6 kg equivalent TNT and the shrapnel generation by the explosion is the major risk in these tests.

FOREWORD

Activities related to explosives involve significant risks for workers running them and for other people in the area of influence. Such manufacture, packaging, handling, transportation, storage, preparation blasting at a controlled detonation of explosives or eliminate unusable (irregular or guarantee out) rises a series of problems regarding security of persons and property. In specialized laboratories (LMEAP - Laboratory explosives for civil use and pyrotechnics LTI - Laboratory for Blasting Techniques) within the Department of Safety Explosives and Pyrotechnic Articles (DSEAP) activities are carried out often with explosives that had not yet meet health and safety features, they will during the tests and certifications for verifying and ensuring measures for the safe use throughout the life of these products.

Thus, the jobs / workstations existing in the specialized department DSEAP these measures for safety and health at work must be applied very carefully in order to achieve full control of specific risks arising from their activities with explosives.

THE EXPLOSIVE DETONATION MECHANISM

Detonating the explosive in a controlled action is scheduled and carried out taking all the security measures applicable. The explosion occurs as a result of energy transfer from an external stimulus that will trigger the explosive charge violent exothermic decomposition reaction (oxidation) of explosive material. This reaction is of a "chain" type with its spread throughout the explosive and totally consumption of it without the need for external energy or other interventions or addition of atmospheric oxygen in its deployment.

In contrast to the phenomenon of burning normal or bursts character deflagrate where the propagation velocity is of the order of m/s up to hundreds of m/s for the detonation reaction is carried out with the speed of propagation of sound, with thousands of meters per second, the phenomenon is perceived by the human sense (sight, hearing) as instantly.

Phase transformation from solid compound, gelatinous or liquid phase material with gaseous aggregate state at this speed of reaction leads to higher volume through the phase change from solid - gas many thousands of times, the sudden release of energy manifesting itself with develop a high pressure on the order of tens or even hundreds of kilo bar in the reaction zone and a sharp rise in temperature. So in response to the explosion energy is manifested as both thermal and mechanical energy, the first being exploited technically in the process of blasting (mechanical destruction of material) in area of influence. The mechanical energy developed by the detonation of the explosive process acts as a shock over the environment.

In this open space pressure decreases after a commandment that is characterized by the expansion of gas explosion on available space to the inverse cube of the distance from the epicentre. Such a relationship is synthesized by Richards and Moore:

$$P = A * (R/(W)^{b})^{a} \qquad (1)$$

where:

P - wave peak overpressure [kPa];

A - constant specific to load location;

R - distance from the source point of detonation considered, [m];

W - equivalent detonated explosive mass [kg TNT];

a - empiric exponent experimentally determined (negative);

b - exponent assigned for explosive charge.

Fig. 1. Measurement of explosion pressure in blast bunker with two piezoelectric transducers - catch oscilloscope image

RISKS GENERATED BY THE DETONATION OF EXPLOSIVE CHARGES IN TEST POLYGON

Exposure to the effect of explosion pressure of air pressure front is one of the most important effects of the explosion and inadequate exposure to it, may endanger the people of the impending fatal influence. To the extent that this pressure decreases in the tens of mili-bars respectively on logarithmic scale to a level of 120 to 140 dB can permanently damage the hearing aid. The main preventive measure is the shelter of the staff and remote triggering the explosion. Generating explosive shrapnel confined in steel tubes are a major risk of injury or killing of people in situations that are throwing their fly-path.

The kinetic energy of this shrapnel is particularly high speed when throwing disintegration of the steel tube is even detonation of the explosive speed that is confined between 2000 and 5500 m / s in plain situation. Therefore the kinetic energy of released shrapnel:

$$E_s = m_s * v^2/2 \qquad (2)$$

where:

E_s - kinetic energy of shrapnel [J];

m_s - mass of shrapnel, [kg];

v - shrapnel speed launching [m/s].

In the event of shrapnel weighing 50 grams, the kinetic energy will certainly higher to 100 kJ and throw distance in open space can reach hundreds of meters or even kilometres.

Fig. 2. Confined explosive charge in steel pipe prepared in blast bunker

Other factors also increase the danger of shrapnel penetration and formation of very sharp cutting edges with the heating to high temperatures of hundreds of ^{0}C.

These tests on explosive charges are frequently in the technical facilities of the test site. All explosives are not sensitive to initiation with detonator no. 8 must be loaded in steel tubes and the initiation is done with booster made of high power explosives. Also the determining the property detonability high nitrogen content fertilizer is carried out in a steel pipe with an inner diameter of 100 mm and a length of 1 meter with wall thickness about 5 mm, the material under test load size with 500g hexogen booster reaches over 5.5 kg TNT equivalent mass and the steel pipe being approximately 7 kg, that will generate on a complete detonation 7 kg of extremely dangerous shrapnel.

As a measure to protect staff these works, detonating confined explosive charges is carried in the baffled blasting bunker designed to withstand blast pressure generated 10 kg eq. TNT, respectively in an armoured explosion chamber for the determination of toxic gas explosion that can detonate loads of up to 600 g net explosive under perfect seal during the explosion and subsequent measurement. Both reinforced concrete walls structures are lined with material wear to stop shrapnel

Fig. 3. Preparing confined explosives charge and installing booster and detonator

and to withstand the explosion pressure exerted on the walls, ceiling floor. The baffled blasting bunker allows detonate larger explosion charges, explosion pressure is vented through the baffle with section 2x3 m the replaceable liner elements of bunker retaining all the shrapnel.

Fig.4. Scrap and shrapnel generated by pipe when testing an explosive gel - 200g cartridge conditioned to hydrostatic pressure

The presence of **explosion toxic gases** expose personnel can cause acute or chronic poisoning. Explosion gases are dangerous from the point of view of toxicity consist mainly in carbon oxides (CO and CO_2) or nitrogen oxides (NO, NO_2 and NO_3) the gases is in high amount considering that the solid mass of the explosive is converted to the mass of the gas mixture with very high concentrations in enclosed spaces.

Fig. 5. Armoured explosion chamber for the determination of explosion toxic gases

This appears at testing tunnels for explosives and detonators and also in the two both blasting equipments mentioned above. After carrying out a test the operator blaster and the test responsible engineer should check the result (i.e. complete detonation) and for placing on the location the next charge which is one further test needs to enter into this space. This is done strictly by finding complete cleaning of air by means of mechanical ventilation in tunnels and the gas chamber or by natural draft when blasting is made in baffled the bunker.

CONCLUSIONS

Testing explosives in the stands and the existing facilities of the explosives polygon at INSEMEX is taking measures to prevent the manifestation of risks for their staff and people from the adjacent area, due to the identification and quantification of the effects of controlled explosions by the existence and use of adequate technical equipment and facilities for this purpose, awareness and training of personnel for proper implementation of work instructions necessary to technical and organizational measures conducting activities safely.

Acknowledgements

This paper was developed within the Nucleu-Programme, carried out with the support of ANCSI.

*Attila KOVACS PhD.Eng.[a], Gabriel VASILESCU PhD.Eng.[b], EDWARD GHEORGHIOSU PhD.Eng.[c], Daniela RUS PhD.Eng.[d], Ilie-Ciprian JITEA PhD.student Eng.[e], Sorin BORDOȘ Eng.[f]**

[a,b,c,d,e,f] National Institute for Research and Development in Mine Safety and Protection to Explosion – INSEMEX, 332047 Petroşani, Romania

References

Băbuţ G., Moraru R., Matei Ion, Băncilă N.-*Sisteme de management al securităţii şi sănătăţii în muncă*, Editura Focus, Petroşani, 2002.

Dinu F, Marginean I, Sigauan A., Kovacs A., Ghicioi E, Vasilescu D.G.- *Effects of close range blasts on steel frames. Experimental testing and numerical validation*- SDSS` 2016 The international Coloquium on stability and ductility of steel structures. Timisoara ISBN (ECCS) 978-92-9147-133-3, pp 699-708 (2016).

Moraru, R.I., Băbuţ, G.B., Popescu-Stelea, M., *Approaching occupational safety and health emerging risks categories and prevention*, Quality - Access to Success, Volume 15, Issue 139, pp. 104-108, (2014).

Semen C., Fodor D. – *Influenţa utilizării explozivilor asupra factorilor de mediu. Buletin* AGIR nr.3/2006;

*** Directiva explozivi 2014/28/UE, transpusă în legislaţia românească prin HG 207/2005 *privind stabilirea cerinţelor esenţiale de securitate ale explozivilor de uz civil şi a condiţiilor pentru introducerea lor pe piaţă*

TESTING ON RESISTANCE TO HYDROSTATIC PRESSURE ACCORDING TO SREN 13631-6

Abstract

Recently Romania adopted the European legislation regarding the explosives for civil use Directive 93/15 CEE. In the annex of the directive are established the essential safety requirements which shall be tested applying the harmonized European standards. For this reason the testing facilities shall be updated and the paper describes the researches made in INSEMEX in the Laboratory for Explosives and Blasting Techniques to achieve the level of the requirements provided by the European standard for determination of the resistance to hydrostatic pressure of explosives.

GENERAL

Explosives are chemical compounds – substances which form an unstable system, if considered from a thermodynamic point of view. They include a high amount of energy and, with the help of an external, they decompose in a sudden and violent manner and a high amount capable to carry out a mechanical work of heat and hot gases are being generated. Irrespective of the constituents, proofs connected to the fact that not any type of explosive substances can be used as a civil use explosive exist. The explosives that can be used for this purpose are called technical explosives and shall have to fulfill certain requirements. Considering the diversity of the substances used in these explosive and the conditions in situ, it is obvious that also the thermal chemical, ballistic technologic and safety conditions shall differ quite a lot from a product to another. As for the safety and the reliability of explosives, the Directive 93/15/CEC states the essential safety requirements for explosive products. Practice has shown situations when these explosives are being used in unfavorable conditions (with respect to safety and suitable reliability). Such conditions may be environments with high hydrostatic pressure which shall change the operational (ballistic) parameters; consequently the resistance to hydrostatic pressure becomes an applicable essential safety requirement which shall be determined in laboratory conditions (reproducing in situ conditions).

CHARACTERISTICS OF EXPLOSIVES RELEVANT TO THEIR RESISTANCE TO HYDROSTATIC

PRESSURE

Detonation velocity is one of the most important ballistic parameters for the civil use explosives. It describes the chemical decomposition with a high accuracy.

The industrial explosives are made of a mixture of substances, some being combustible some having an oxidizing character; when the initiation is correct, there occurs almost an instantaneous exothermic reaction which generates a series of gaseous high temperature products stable from a chemical point of view [1].

Both detonation velocity and stability are manly influenced by the following factors:

- chemical composition;
- grinding size and homogeneity of explosive;
- humidity of explosive;
- density of explosive.

The researches have proved, that there is a certain interdependence between the density of explosives and the detonation velocity. An increase of the density shall lead to a there as of the decomposition of explosive substances.

This interdependence is confirmed by the fact that an increment of density with 0,1 g/cm3 shall increase detonation velocity with 320-400 m/s. This correlation is not valid for all explosives. For the case of explosives under the form chemical compounds (trotyl, hexogen, etc.), the detonation velocity goes to maximum values when density increases. The explosives made of several chemical compounds get to maximum detonation velocities when the density of the explosive is between 1.4 – 1.6 g/cm3, also called critical density.

The laboratory testing and the real operations have proved that when the density of the explosive is lower or higher than the optimum value (critical density) that corresponds to the composition, the detonation velocity shall diminish.

Density of explosives

A high density explosive involves a good concentration of the explosive substance and it is very useful for small diameter blast holes, while a low density explosive has a homogenous distribution and it is most adequate for large diameter blast holes.

Density is being established for every type of explosive and is intended to check the porosity of the explosive. A gradual loss of porosity involves a high density of the explosive so detonation is rendered more difficult.

Consequently, periodical measurements of the diameter of the cartridge, of its length and weight shall be carried out. For the case of dynamite, the density shall not exceed 1.5 g/cm3 and for astralite – 1.09 g/cm3.

We have:

- the density of the product, which rangers between 0.8 g/cm3 for simple mixtures (such as ammonium nitrate with Diesel oil) and 1.5 for certain dynamites. It is very important to know - the values of these densities because the potential amount of energy delivered by explosive depends on this value;

- additionally, one should consider the density of the explosive when loading drill holes full of water;

- loading density – it defines the mass of the explosive which could be introduced inside a drill hole of pre-determined volume.

Resistance to compression

It is necessary to determine this parameter because it represents a direct effect of the hydrostatic pressure. The explosive which contain nitro-glycerine may not detonate when submitted to a compression which exceeds certain values. Practice has shown that these vibrations occur when these explosives are being used in areas where there is water, mud etc. and they generate pressure over these explosives. This phenomenon tends to become more acute when the amount of nitro-glycerine increases, the same as the period during which the explosive stays under pressure. The non detonation doesn't occur at a pressure lower than 0.5 MPa (which corresponds to a water head of 15 m) applied for aprox 12 hours.

For special situations (i.e. geological and physical researches, underwater blastings) there are being used explosives which behave adequately at high pressure.

PRACTICAL APPLICATIONS OF EXPLOSIVES WHEN THE HYDROSTATIC PRESSURE SHALL HAVE TO BE TAKEN INTO CONSIDERATION

Blasting operations performed in watery conditions, with or without mud and where the hydrostatic pressure plays an important part:

- Blasting in long drill holes with water ingress;
- Underground blasting operations for unblocking purposes;
- Underground blasting of wood structures;
- Underground blasting of rocks with applied charges;
- Blasting of constructive elements made of bricks, concrete and reinforced concrete part of underground structures.

Special blasting performed at very high pressure

Special blasting operations shall be carried out for commissioning new oil wells. The purpose of these operations is to punch the tubing of the well and to make deep holes of suitable volume inside the surrounding rocks and within the area of the foot, allowing the outflow of oil and / or natural gases from inside the deposit, with no caving of the side walls of the well (destruction of the tubing).

These of blastings, whose purpose is the commissioning of wells, are very important because when they are not performed in the right manner, the oil and/or natural gas shall have an inadequate flow rate and the life of the well shall be shortened or the whole well shall be put out of order. Consequently, the losses are high, considering the costs involved for 1 m of drilled well. Both the manufacturer of explosive materials and the experts which fulfill the blasting operation shall have to determine the technical solutions in compliance with the conditions where the blasting is to be performed.

Everyday practice for the exploitation of natural gas and of oil shows the use of wells with depths above 1000 m (and sometimes more). So, this depth rises problems with respect to temperature with the area of the foot and with respect to hydrostatic pressure which can reach high values. Also, it is very important to take into consideration the drilling mud in the drill holes

(> ρ 1000 kg/m^3) with liquid head + mud thickness of hundreds of meters because it generates a much higher hydrostatic pressure than the pressure normally met in holes drilled in underground or at surface.

There has to be underlined that this special type of blasting is not covered by the testing method described below. This method is grounded on the European standard and forms the object of some specific documentation drawn up by the manufactures.

SREN 13631-6: CIVIL USE EXPLOSIVES: HIGH EXPLOSIVES – PART.6 : "DETERMINATION OF RESISTANCE TO HYDROSTATIC PRESSURE USED FOR LABORATORY TESTING".

This European Standard specific a method for determining the ability of high explosives for civil uses to detonate while under applied hydrostatic pressure. This method is applicable to high explosives in cartridges and as bulk products intended for use under conditions where hydrostatic pressure may adversely affect safety and reliability. This method is limited to explosives that are able to detonate without confinement at normal atmospheric pressure.

Test pieces

For cartridges explosives, test three cartridges of the minimum diameter placed on the market for use under hydrostatic pressure.

For bulk explosives, prepare and test three cartridges pf diameter equal to the minimum borehole diameter specified by the manufacturer for the product. The length shall be at least five this diameter.

Procedure

Attach the cartridge, to the witness system initiator after it has been primed with an initiator.

Insert the assembly into the firing tube with the seal (6), the water inlet and the electric leads in place.

Fill the firing tube completely water. Measure the temperature of the water. Apply at least the maximum pressure specified by the manufactured of the high explosive, but no more than 5% above this value. Maintain this pressure for 2 h.

After that time, disconnect or isolate the pressure system shown in Fig.2 by closing the value for 10 minutes while maintaining the hydrostatic pressure in the firing tube.

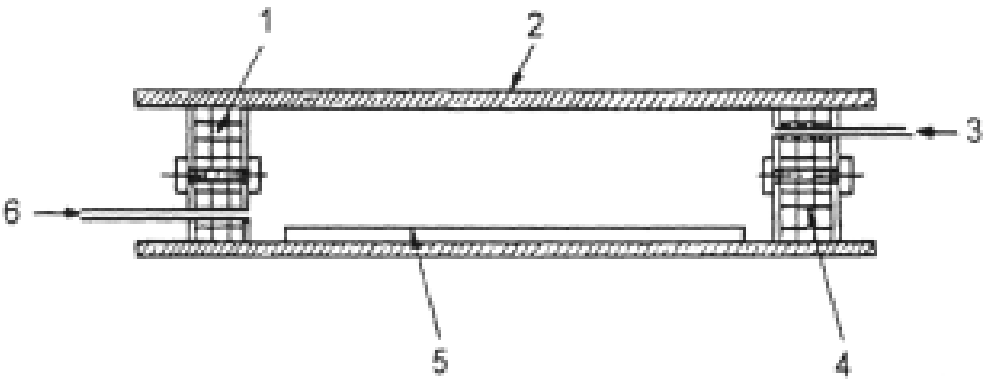

Key
1 – Seal
2 – Firing tube
3 – Electrical leads
4 – Seal
5 – Witness
6 – Water inlet pipe

Fig. 1. Firing tube

Key
1 – Relief valve
2 – Compressed air
3 – Electrical leads
4 – Firing tube
5 – Explosive cartridge
6 – Seal
7 – Water under pressure
8 – Water inlet
9 – Manometer
10 – Valve A

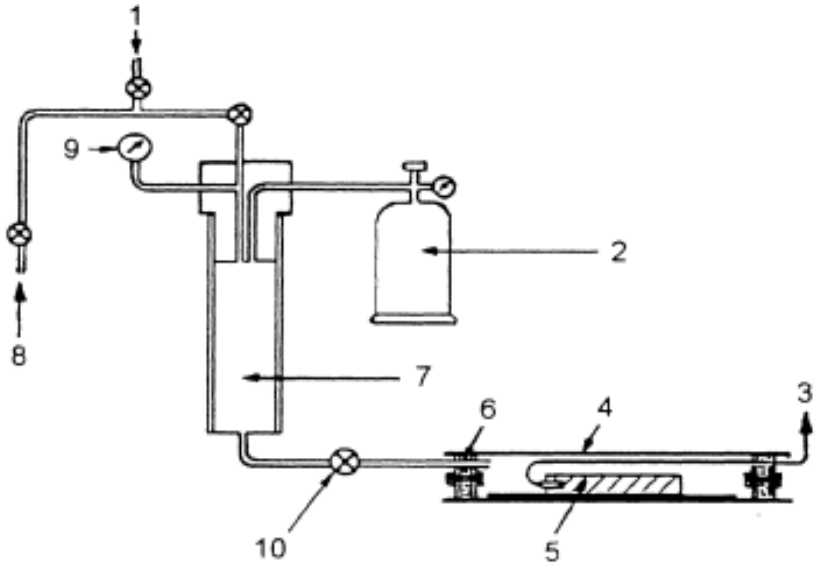

Fig. 2. Example to a pressure system

Connect the electrical leads and fire the initiator. Record the result of the test. The test is performed 3 times unless failure occurs in which case the test is discontinued. The results of the tests shall be recorded in the test report as "Pass" / "Failure".

Test report

The test shall conform to EN ISO/ IEC 17025. In addition the following information shall be given:

a) a reference to this standard;

b) the temperature of the water immediately before each test;

c) the diameter of the cartridges;

d) the pressure applied;

e) the witness system used;

f) the means of initiation;

g) the results, as "Pass" (if all three cartridges detonate) or "failure" (if one of the cartridges fails to detonate).

SOLUTION FOR TESTING THE RESISTANCE TO HYDROSTATIC PRESSURE OF CIVIL USE EXPLOSIVE MATERIALS

The check the resistance to hydrostatic pressure of explosive materials, there shall be carried out tests on the laboratory stand. It shall reproduce the most unfavorable conditions which may occur in the everyday practice whether the manufacturer states that his product can be used in drill holes with water or for underground blastings.

Two testing procedures have been developed considering the requirements in the harmonized European standards on how to determine resistance to hydrostatic pressure of high explosives (EN 13631-6) and of electric detonators.

DESIGN AND CONSTRUCTION OF THE TEST STAND

There has been worked out the technical documentation for the test stand. This documentation is made up of a written part (technical specifications) and of graphical part (the drawings of the component parts ordered at a a mechanical plant based on the requirements stated in the standards mentioned at the clause: References). Beside other things, one of the ideas was to reduce costs as much as possible considering that, when testing high explosives, the detonation may destroy the cylinder entirely or partly. The cylinders used for testing of high explosives were designed so that they can stand the testing hydrostatic pressure. They are equipped with a self destroying protective element which gives up in case of detonation and protections the other elements of the hydraulic circuit.

With the purpose to reuse part of the most expensive component parts their resistance has been oversized; the chopper components have been calibrated to their limit of resistance so that their destruction protect all the other parts. This, the cover of the cylinder and the water supply nipple together with the electric power supply nipple are protected by the destruction of the body of the cylinder (threaded tube sealed at the other end).

Considering that the pressures inside the system aren't so high (0.3 MPa for electric detonators and 0.6 1.5 MPa for high explosives), we have selected a cheaper sealing system which doesn't involve additional cutting operations, such as cutting the places for the sealing gaskets with "o" shaped rings, flat klingherit rings, etc.

The construction of the witness system consists in plating 1/3 of the circumference of the cylinder with aluminum (there has been considered both the easiness of processing and mounting and the reduced costs).

The size of the cylinder also allows the use of larger cartridges explosives; to provide an acceptable thermal inertia, the cylinder is filled with 4.5 ÷ 5 l of water at 20^0C.

The pressure inside the cylinders generated with the help of a manual pump. The cylinder is filled with water with the helps of a PVC hose resistant to a pressure between 6-8 bar. A pressure gauge is mounted on the hose; this instrument measures the value of the pressure inside the system and two ½ closing valves which segregate the hydraulic column before detonation.

The cover has a nipple through which the blasting circuit is being accomplished with the help of two copper terminals. The inside canal on the nipple is closed with electro-insulating material which seals the area. For monitoring the effect of the explosion a witness plate made of an easy degrading material (such as aluminum) is mounted inside the firing tube.

There has to be mentioned that during the testing, the explosive is fired inside the cylinder with the maintenance of the rated hydrostatic pressure is.

As a safety measure, the cylinder was placed inside sand put, with the observance of the safety distance and additionally there were used wooden planks to diminish the spreading out of potential shell splinters.

CONCLUSIONS

Different types of explosives were tested during the above said experiments: boosters, emulsions and dynamite.

The results recorded in the test reports have allowed an estimation of the resistance to hydrostatic pressure of the explosives tested on this, test stand in compliance with the requirements specified by manufacturers in the technical documentations of products.

1. Electric power supply nipple
2. Water supply nipple
3. Cover
4. Aluminum witness plate

Fig.3. Component parts of the system for testing to hydrostatic pressure:

Fig.4.

1. ROCK STAR II – electric detonator made by Austin Detonator
2. PT 60/40 Booster 30 g – Nitroexplosives Făgăraş

Fig.5. Full system for testing of the resistance to hydrostatic to pressure of civil use explosives

1. Full assembled cylinder with the explosive inside and ready for testing
2. DN 15 hose
3. Closing valves
4. 1- 6 bar pressure gear

Fig. 6.1. State of cylinder no.1 after testing

Fig. 6.2. State of cylinder no.2 after testing

Attila Kovacs – Eng. PhD., Edward Gheorghiosu – Eng.,Florin Rădoi – Eng., Daniela Carmen Rus - Eng. INSEMEX Petrosani

REFERENCES

[1] **Fodor D.**, "Explozivi industriali" Editura Infomin Deva, 2000.

[2] **Tat S., Zaporojan M., Fissgus K**. "Explozivi şi tehnica împuşcării în industrii" Editura Tehnică, 1985.

[4] SR EN 13763-1:2004 "Explozivi de uz civil. Capse detonante şi relee întârzietoare. Partea I: Cerinţe".

[3] SR EN 13857-1:2004 "Explozivi pentru uz civil. Partea I: Terminologie".

[5] Pr EN 13631-1 "Explozivi pentru uz civil. Explozivi brizanţi. Partea I: Cerinţe".

[6] SR EN 13631-6:2003 "Explozivi pentru uz civil. Explozivi pentru uz civil Explozivi brizanţi. Partea 6: Determinarea rezistenţei la presiune hidrostatică".

[7] SR EN 13763-12:2004 "Explozivi pentru uz civil. Capse detonante şi relee întârzietoare. Partea 12: Determinarea rezistenţei la presiune hidrostatică"

[BACK TO TOP]

Radio Location Techniques in caves and tunnels

In the Construction world, every Quantity Surveyor, Planner and Engineer knows from where they.wish to start their Tunnel project, the route it will take, and the point at which it will emerge on the other side of a water channel, mountain , valley or point in a City.

Often Bore holes along the proposed route will give a clear indication of what the rock time and strata will be, and bearings and laser points can be set up along the line of the Tunnel as it is excavated. Two years ago, Wookey Hole Caves Ltd, in Somerset, England, wished to construct a link Tunnel from Chamber Nine, through the bedrock to a "Known" Chamber Wookey Twenty. What was not known, was the exact position of this Chamber, as it had only ever been accessible to Cave Divers, who had surveyed the route using compass techniques underwater, so all we had to go on was a rough bearing, and a very vague distance of somewhere between 70m to 100m in !.

The surface topography was so step and unyielding, it was also not possible to sink trial boreholes, so the Geologists could only guess where along the Tunnel line, we would hit the fabled "Unconformity" which occurs at a point between Conglomerate rock, and Carboniferous Limestone.

This led the Tunnelling group of *Demrock Explosives Engineering* and Matt Durban Tunnelers, to have to resort to a solution.

Here my friend and colleague Brian Prewer takes up the story:

Cave surveying has always been fraught with difficulties. The very nature of the cave environment does not make for accurate surveys. Low and torturous passages, mud, ladder climbs on metal ladders & water, especially water in totally flooded passages, known in the caving world as sumps, these all reduce the survey accuracy.

Sumps in particular are a problem as the surveyor, almost always a cave diver, will require metal air bottles when diving. The metal bottles may well affect the survey accuracy when using a compass.

Modern surveying techniques using lasers allow for better surveys to be made under difficult cave conditions, however the underwater problem still exists due to the scattering of the laser beam by particles in the water. One way of improving survey accuracy in this situation is to carry out spot checks using a technique known as 'radio location'. Here a single survey point may be found on the surface thus giving an accurate check on a previous laser or compass survey. There are of course many problems using radio waves. It is well known that the penetration of rock by electromagnetic (EM) radiation is an inverse function of frequency. Low frequency EM waves such as 200kHz, (the old BBC Light

Program) have been found to penetrate short distances through rock, however high frequencies are almost completely attenuated. The possibility of using low frequency magnetic induction was investigated back as early as 1929 in Mammoth Cave in Kentucky. Later another system using Very Low Frequency (VLF) was tested successfully using two loop aerials fed with a frequency of 2kHz.

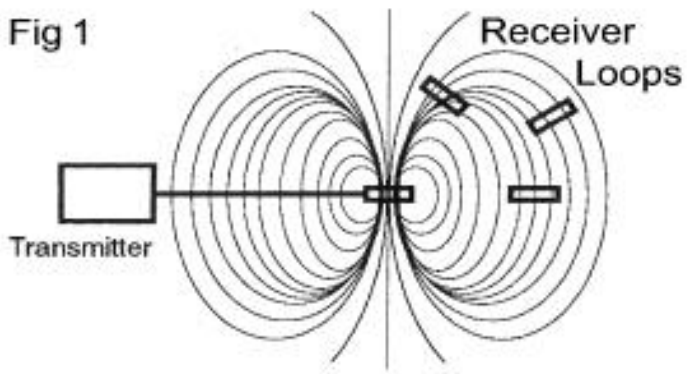

Fig. 1.

More modern systems now use 87.5kHz as their operating frequency thus allowing not only accurate spot fixes to be had but also speech communications. The latter being extremely useful for cave rescue. The current equipment, known as the "Grunterphone", consists of two units, a surface transmitter/receiver and a similar underground unit. The underground unit is housed in a waterproof container allowing passage through sumps.

Each unit consist of a transmitter, a receiver and a 1 metre square loop aerial thus allowing 2-way communications.

Each radio unit is a single sideband suppressed carrier system operating at the very low frequency of 87.5kHz. This simply means that the majority of the transmitter power is not wasted thus saving on battery size. Each unit has a microphone and an earpiece for speech communication as well as a means of transmitting a short "bleep" tone. This tone is used primarily for spot location of the underground transmitter.

The method of checking a cave survey relies on the two loop aerials, one on the surface and one underground. To understand the principle of magnetic induction it is necessary to know the shape of the magnetic field produced by a loop aerial. *See Fig 1.* In the figure the field pattern is similar to that of a bar magnet. If a second loop is placed in the field of the first

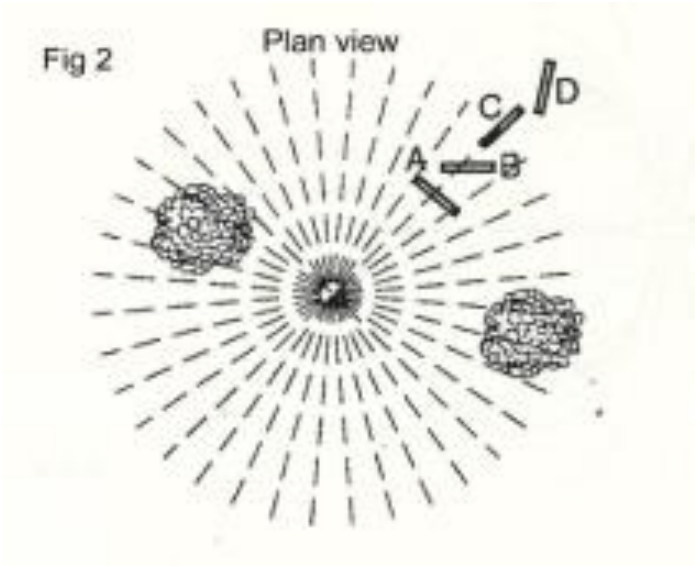

Fig. 2.

one then a signal will be induced depending on the orientation of the second loop. If the loop is perpendicular to the field then the induced signal will

be at a maximum. See plan view position A in Fig 2. If it is parallel to the field then the induced signal will be zero. See position C in Fig 2. A reduced signal will result from any other angle. See positions B & D in Fig 2.

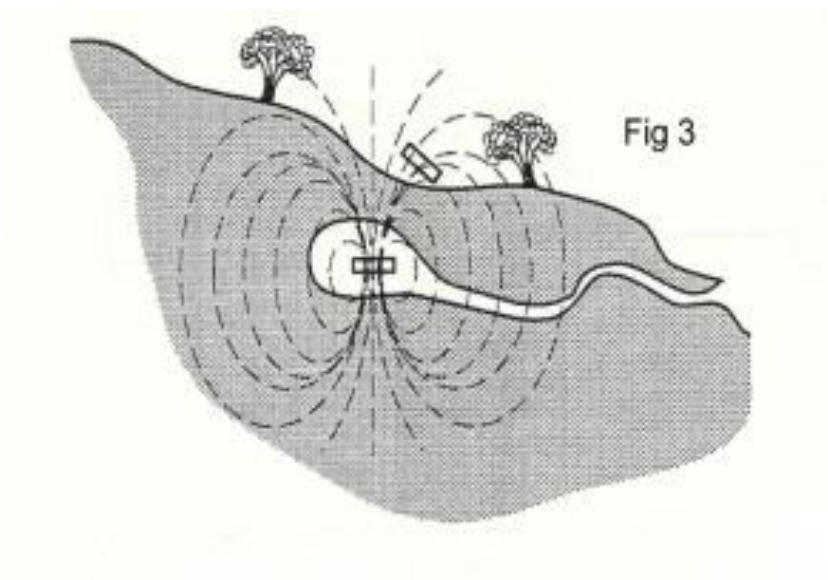

Fig. 3.

If one loop aerial is laid horizontally in the cave then it should be possible to locate its position relative to the surface using the second loop. *Fig 3* shows a section of a typical layout. The basic method of location relies on simple triangulation where three coordinates are found on the surface using the surface loop. Starting in the cave the loop is set up to be horizontal. The surface loop is then taken to a point close to the known survey and approximately where the underground transmitter has been positioned. This loop, now in the vertical plane, is rotated until the bleep signal is detected. The signal will drop to a minimum as the loop is rotated corresponding to the position shown in Fig 2C. At this minimum position the operator places a marker pole in the ground alongside the loop.

An assistant then walks away from the loop in a line that is in the plane of the vertical loop. At a reasonable distance, say 15 metres, a second marker pole is placed in the ground. This line between the two poles is the first of the three triangulation lines. The whole procedure is now repeated for lines two and three by moving to a new location roughly at right angles to the first line. The intersection of the three lines is vertically above the underground loop. This is known as Ground Zero (GZ). Surface coordinates may now be recorded.

It is also possible to calculate the depth of the underground loop below the surface. This involves a simple mathematical calculation after the surface operator walks in a straight line from GZ carrying the loop parallel to the ground. At a certain distance from GZ the signal will reduce to zero. A measurement of this horizontal distance from GZ allows the vertical depth to be calculated.

In conclusion radio location allows pin-pointing of a particular part of a cave in order to check the accuracy of a more conventional type of cave survey. This is extremely valuable when surveying caves that contain flooded sections. A good example of the use of this technique was in Wookey Hole Cave in Somerset.

Here a new tunnel was to be blasted that would allow public access to a chamber known as Wookey 20. This chamber is located beyond many metres of flooded cave passage. A surface spot check was needed in order to ensure that the new tunnel maintained the correct heading.

Brian Prewer, Wessex Cave Club
Nigel Taylor M.I.Exp.E, T.M.I.Q

[BACK TO TOP]

Drill & blast wizardry in Australia

Some people refer to him as the Wizard - "What he does shouldn't be possible!"

When the Swede **Rauf Osterman** arrived in Brisbane in 2004, he already brought a wealth of experience in advanced drilling and blasting from the tunnelling, construction and mining industries. In short, he knows what he is doing. The sole inventor of patented methods such as *circular pre-split rise* and *vertical string charging*, Mr Osterman has pioneered a wide range of new concepts down under. Based in Brisbane, he operates a consultancy company, *Osterman Consulting*, specialising in advanced blasting solutions.

Hi Rauf. First things first, some people refer to you as the "the Wizard". Why?

Ha ha, not sure, it may have something to do with my party tricks? No. I suppose it may be because I have the firm belief that there's no situation in which hard rock cannot be removed via blasting. With the right experience, technical knowledge and control everything is possible. This belief combined with, I humbly suppose, my creative nature has resulted in some complex D&B projects that I'm very proud of. "There is no situation in which hard rock cannot be removed via blasting."

Could you give us an example of such a project?

One very recent example would have to be the blasting works that we did for the excavation of the Barry Parade project. The previous site law for the project had determined that one third of the rock right up against two heritage listed buildings could not be blasted. The rest could only be blasted using 5kgs MIC, or Max Instantaneous Charge. We managed to use 23kgs MIC within the "no blast" zone and 6kgs right up against the Heritage listed buildings.

Although my favourite environmentally restraint job of all time must be the Pir F blasting at Stockholm's International Airport

What did you do before you landed in Brisbane?

I spent 11 good years at Nitro Consult in Stockholm being involved in many complex and very interesting projects. I have also worked as a construction manager at two of Sweden's largest tunnelling projects, the Southern Link and Citybanan.

Why Australia? And, why Brisbane?

Two words, weather and lifestyle. But the result of living and working here has been a sharp learning curve into D&B in the Australian Mining Industry. My inquisitive nature and never-ending thirst for knowledge has resulted in rich experience in all forms of mining, surface coal as well as surface and underground hard rock mining.

How would you describe your business here? What do you do, exactly, and for whom?

My love for tunnelling and construction, and the environmental challenges, have resulted in heavy involvement in urban projects. I also have a large client base in the mining industry, but in recent years there has been a decline in the Australian mining industry. Most of my clients are civil contractors and mining companies.

How does Australian D&B compare with, say European D&B? What are the main differences?

Mining in Australia is a significant primary industry, and Australia is a technical leader in regards to mining methodologies, always looking for technical solutions to improve productivity.

Conversely, and for similar reasons, Drill & Blast in tunnelling and construction, is not as advanced as in Sweden. Because there are less opportunities, and also because the tunnelling and construction culture here has always been scared of D&B. It was never seen as the primary alternative.

In contrast the Swedish bedrock is predominantly made up of Granite, a very hard rock type that requires blasting to be removed. This means that almost every form of excavation requires blasting, which has resulted in a wealth of knowledge and experience in urban rock blasting. Experience that I am applying here, trying to change the Australian tunnelling and construction culture.

What about environmental monitoring, I'm thinking of noise and vibrations?

The rich blasting culture in Sweden that started with Alfred Nobel has resulted in the most technically advanced environmental monitoring and management systems.

Systems that I have also introduced into the Australian market.

"…the most technically advanced monitoring and management system"

Instinctively I would say that Australian engineering is heavily reliant on software modelling for design. Swedish concept puts a large amount of trust in the engineers' and consultants' experience and gut feel. Software is only used to supplement the experience.

I understand that you have introduced some novel concepts and methods to Australia? What's your secret?

Some people think out of the box, I'm still looking for my box. Jokes aside,I take pride in a creative and flexible approach to D&B. This often helps me see patterns beyond the obvious, solving larger problems by using a variety of concrete ideas or clues.

Throughout my career this approach has helped me to find alternative and improved solutions to problems. Which, in turn, has resulted in a number of patents, concepts, theories and trade secrets.

What about rules and regulations? Are they different too?

The safety culture in Australia is very strong compared to Sweden where the word for safety induction does not even exist. Interestingly, this has not resulted in poorer safety statistics in Sweden but that's a whole topic on its own. I would say that Australia uses many more rules and regulations to govern its Industries.

How did the market react to your new ideas?

The mining industry is very conservative. Change interferes too much with production and can have expensive consequences if they don't work. On the other hand I have been lucky enough to work with some very large clients that have been very pro-technology. People that are hungry to find new technical solutions to improve what they are doing. The most difficult part of what I do is not technical, it's the people barrier.

Finally, what about your own life down under? Are you a full-fledged Aussie by now?

"Bloody Oath Mate", and proud of it!

New EFEE members

EFEE likes to welcome the following Members who recently have joined EFEE

Corporate Members

OY Forcit AB, Finland
www.forcit.fi

Strayos Inc., USA
www.AirZaar.com, www.strayos.com

Individual Members

Jacob Schneider, ROHDE NIELSEN A/S, Denmark Akin Domac, Yapı Merkezi Cons. & Ind. Inc., Turkey Shasi Kant, Nelson Brothers Inc., USA
Peter Pip, Gulf Rock Engineering L.L.C., UAE
Michael Zivcic, Nordgold, Australia

[BACK TO TOP]

[BACK TO TOP]

Upcoming Events

World Tunnel Congress 2017
June 9-16, 2017
Bergen, Norway
www.wtc2017.no

MPES 2017
26th INTERNATIONAL SYMPOSIUM ON MINE PLANNING & EQUIPMENT SELECTION
August 29-31, 2017
Luleå, Sweden
http://www.ltu.se/research/subjects/Mining-and-Rock-Engineering/Konferenser/MPES-2017?l=en

EFEE 9th World Conference on Explosives and Blasting
September 10-12, 2017
Stockholm, Sweden
www.efee.eu and
http://efee2017.com/

44th Annual Conference on Explosives and Blasting Technique, ISEE
January 28-31, 2018
San Antonio, TX, USA

Fragblast 12
June 11-13, 2018
Luleå,Sweden
http://www.ltu.se/research/subjects/Mining-and-Rock-Engineering/Nyheter/FRAGBLAST-to-Lulea-2018-1.143098?l=en

HILLHEAD
June 26-28, 2018
Derbyshire, UK
www.hillhead.com

EFEE 10th World Conference on Explosives and Blasting
2019
Helsinki,Finland


INFRA
A complete solution for remote construction site monitoring
Blast application available
INFRA Net
Sigicom
Dashboard
Projects
Data reports
Messages
Hardware
Users
Project: Blasting Stockholm
Measure points
Blast events
Map
Users
Unplaced
sigicom
C12 Triaxial Vibration Monitor
sigicom.com
Sigicom


The art of successful blasting
Nitro Consult
www.nitroconsult.se

[BACK TO TOP]

44TH ANNUAL CONFERENCE ON
EXPLOSIVES & BLASTING TECHNIQUE
January 28 – 31, 2018
San Antonio, Texas USA

Grand Hyatt San Antonio

Call For Papers

ISEE Conference 2018

Call for Papers

The International Society of Explosives Engineers' Conference Program Committee is issuing an industry wide Call for Papers to be presented at the 44th Annual Conference and published in the Conference Proceedings.

Here's your chance to share your techniques, strategies, solutions, product innovations, and research discoveries with your peers.

Ideas should be submitted in the form of a 200-400 word abstract (summary) highlighting the major points of your 8 to 10 page paper. Papers may not be commercial in nature.

Abstracts must be submitted by completing the online abstract submission information by May 12, 2017. The submission site, guidelines, instructions and deadlines can be viewed at www.isee.org. Please contact us if you do not receive confirmation within two weeks of submitting your abstract. Chapter sponsored papers must be submitted by the deadline.

River Walk, San Antonio, Texas

Suggested Topics

Papers addressing all explosives, vibration, blasting and drilling related topics are requested. Papers addressing the following topics are specifically invited:

- Explosi es Safety/Security
- E vironmental Improvement
- Drill o Mill Optimization
- Blasting Resea ch
- Digital Imaging on the Jo
- Blast Vibration and Seismology
- ast Blasting and Open Pit
- Explosi es for Oil Extraction
- Explosi es Analysis
- Explosi es Chemistry
- ragmentation Modeling/Measurement
- ase Histories: Problems and Solutions
- isk Assessment/Legal
- Urban Blastin
- emolition Blasting
- Quar y Blasting
- Unde ground Blasting
- Ele tronic Detonators
- Unde water Blasting
- onstruction Blasting
- ublic and Media Relations
- Driller/Blas er Communication
- Basic Drilling Practices
- Blast esign

Deadlines

May 12, 2017
Last day for submission of abstracts.

June 15, 2017
Notification of abstract acceptance.

August 15, 2017
Last day to submit completed papers.

November 1, 2017
Notification of final acceptance of papers.

November 30, 2017
Conference registration deadline for authors.

January 28 - 31, 2018
Annual Conference - presentation of papers.

Abstract Deadline May 12, 2017

International Society of Explosives Engineers
www.isee.org | 440.349.4400

9th WORLD CONFERENCE
ON EXPLOSIVES AND BLASTING

EFEE

STOCKHOLM 2017

10th – 12th September, Stockholm, Sweden
The Brewery

BERG SPRÄNG NINGSKOMMITTÉN

President's Foreword

At the beginning of my foreword and on behalf of the European Federation of Explosives Engineers - EFEE I would like to invite you all to our next 9th World Conference on Explosives and Blasting which will take place in Stockholm from 10th - 12th September 2017.

The EFEE World Conference on Explosives and Blasting has established itself as one of the most important international blasting events. It all started in year 2000 with 1st EFEE World Conference in Munich and after Prague 2003 it continues on regular basis with a 2 years period. All eight of our previous EFEE World Conferences with great success proved how really important events where we can mutually share our different experiences and skills are.

We expect the EFEE 9th World Conference on Explosives and Blasting to be as successful as our previous World Conferences and will attract participants and delegates not only from Europe but also from all over the World. The Conference is organised in cooperation with the Swedish national association - Swedish Rock Construction Committee (Bergsprängningskommittén).

We are delighted to announce Gold Sponsorship from EPC, Forcit, Lubrizol, Maxam, Orica and Yara and Silver Sponsorship from AkzoNobel, Davey Bickford and Sigicom. Our call for papers has attracted a very high response with exceptional quality paper across a diverse topic range, see the reverse of this circular for further details.

Stockholm is the cultural, medial, political, and economical centre of Sweden. It hosts the annual Nobel Prize ceremonies and banquet at the Stockholm Concert Hall and the Stockholm City Hall. The earliest written mention of the name Stockholm dates from 1252, by which time the mines in Bergslagen made it an important site in the iron trade. Stockholm is located on Sweden's south-central east coast, where the freshwater Lake Mälaren — Sweden's third largest lake — flows out into the Baltic Sea. The central parts of the city consist of fourteen islands that are continuous with the Stockholm archipelago. Over 30% of the city area is made up of waterways and another 30% is made up of parks and green spaces. The city's oldest section is Gamla stan (Old Town), located on the original small islands of the city's earliest settlements and still featuring the medieval street layout. Stockholm is one of the cleanest capitals in the world. The city was granted the 2010 European Green Capital Award by the EU Commission; this was Europe's first "green capital".

The most important fact which has to be highlighted in relation to our Conference - is that on 21st of October 1833 was born in Stockholm Alfred Bernhard Nobel the Swedish chemist, engineer and innovator worldwide known for inventing the dynamite. During the Conference the participants and spouses can choose various options which is offering attractive Stockholm for sightseeing and visit of different interesting places.

EFEE 9th World Conference on Explosives and Blasting 2017 will take place at the Brewery - Conference Centre Stockholm a short walking distance from city centre. The venue offers unique conference room and halls, is bright, spacious and modern with excellent loading and logistic possibilities coupled with great interior structural design, which enables a natural flow for the participants. During breaks, participants can enjoy some fresh air out on the 40-meter long terrace or just savour the breath-taking panoramic view of the city centre of Stockholm and the sparkling waters surrounding it. Experiences like these really confirm the feeling of being in one of the best conference spaces in Stockholm.

The Conference will start on Sunday 10th September with registration, workshop and welcome reception and will continue on Monday 11th September and Tuesday 12th September with technical sessions and exhibition. The Gala dinner is planned for Monday evening and will take place at Winterviken in former Alfred´s Nobel factory. Superb building that dates back to 1891 with wooden beams and classic features will host this event. In accordance with experiences from our previous eight Conferences we expect attendance over 450 delegates and professionals from over 50 different countries with a large industry exhibition. This will enable to create really unique forum for meetings and discussions of professionals from tunnelling, construction, demolition, quarry as well as mining industry. We have to share mutually everything new, good experiences - as well as bad experiences to avoid mistakes in the future and improve the techniques. It applies to all of us - explosives end-users, manufactures, drilling and blasting operators, consultants and contractors.

Finally please let me point out one more time the importance of EFEE 9th World Conference on Explosives and Blasting and I´m really looking forward to meeting you all in Stockholm from 10th - 12th September 2017.

Igor Kopal
EFEE President

www.efee2017.com

Technical Committee

Roger Holmberg, Sweden - (Chairman)
Robert Farnfield, UK
Finn Ouchterlony, Sweden
Jörg Rennert, German
Jerry Wallace, US

Conference Committee

Heinz Berger - (Chairman)
José Carlos Gois
Roger Holmberg
Donald Jonson
Jari Honkanen
Johan Finsteen Gjødvad
James Tyler

Registration

Conference registration includes admission to all technical sessions, the exhibition, a copy of the printed proceedings and admission to the welcome drinks reception on Sunday 10 September.

Early Bird Registration

Delegate (Non EFEE Member): **kr. 6,800.00 (excluding tax)**

Student: **kr. 500.00 (excluding tax)**

EFEE Members: **kr. 6,100.00 (excluding tax)**
Including: Individual, Company and Associate Members – one discounted registration only.

EFEE National Members: **kr. 5,440.00 (excluding tax)**
National Members are entitled to one discounted registration only. All participants including speakers are required to pay the registration fee.

To take advantage of our "early bird" registration discount, register online before 31 July:

Register today on-line: www.efee2017.com

For further information please email: info@efee2017.com

Official Languages

The official language of the conference is English.
All technical papers will be presented in English.

Schedule of Events

Sunday 10 September 2017

10.00 – 16.30	Workshop – *Meet at the Hilton Stockholm Slussen for transfer to the E4 Construction Project at 10am*
12.00 – 18.00	Exhibition Set-up – *The Brewery*
12.00 – 18.00	Conference Registration – *The Brewery*
18.00 – 19.30	Welcome Drinks Reception and Opening Speeches – *The Brewery*

Monday 27 April 2015

08.00 – 12.00	Conference Registration – *The Brewery*
08.30 – 17.00	Technical Sessions – *The Brewery*
09.00 – 17.00	Exhibition – *The Brewery*
19.30 till late	Gala Dinner – *Alfred Nobel Factory*

Tuesday 28 April 2015

08.30 – 16.00	Technical Sessions – *The Brewery*
09.00 – 17.00	Exhibition – *The Brewery*
17.00	Conference Close

Sunday Workshop

For the first time in EFEE Conference history the workshop will include a site visit to the biggest road construction project in Sweden – E4 The Stockholm bypass – Förbifart Stockholm.

This essential new section of Stockholm network is 21 km long with over 18 km being routed underground, to reduce the impact on Stockholm's natural and cultural environment, requiring a huge amount of drilling and blasting work using the very latest research and technology.

After this superb visit we will have the unique opportunity to discuss the project with the client, contractors and consultants including key areas of the design, environmental impacts, challenges in blasting and much more.

Further information surrounding the project is available by visiting: http://www.trafikverket.se/en/thestockholmbypass

Timings

10:00	Depart from the Hilton Stockholm Slussen
10:30	E4 The Stockholm bypass
12:00	Return to Hilton Stockholm Slussen
12:30	Lunch
13:30	Workshop presentation and discussion
16:30	Workshop close

Tickets

Entry includes:

transfers, site visit, lunch and post project presentation and discussions

The cost to participate is SEK1,450.00 for EFEE members and SEK1,950.00 for non-members.

Exhibitors

The conference includes a large exhibition, taking up 1000m2. The exhibition will display and demonstrate the latest developments across the industry. Areas covered include explosives, consultants, suppliers and manufacturers. All lunches and coffee breaks will be served around the exhibition hall. The latest list of exhibitors is available on our website www.efee2017.com

If you are interested in becoming a sponsor or exhibitor please visit: www.efee2017.com/exhibition

Venue Information:

The 2017 EFEE conference including welcome reception, technical presentations and exhibition will take place at The Brewery, Stockholm a short distance away from Stockholm's beautiful city centre.

The Brewery is one of the most characteristic elements in the skyline of Stockholm as well as being a greatly appreciated memento of a distant industrial epoch. Beer was produced there for over 100 years to satisfy the thirsts of Stockholmers and the last bottle ever to be filled was capped in 1971.

In the early 1970's The Brewery was converted to a fully functioning conference and exhibition centre.

For further information please visit: http://m-b.se/en/

Accommodation

Guest accommodation has been secured at the **Hilton Stockholm Slussen**.

The Hilton Stockholm Slussen is located in the hip Södermalm area of Stockholm, with fantastic views over the water and Old Town.

Facilities include two restaurants, Eken Bar, complimentary WiFi, fitness centre, a selection of rooms and superb city view.

The hotel is also just a short (10 minute) walk from the Brewery Conference Venue in Stockholm.

For booking information please visit: http://efee2017.com/

Welcome Drinks Reception

The welcome drinks reception marks the opening of the conference and will take place on the evening of Sunday 10 September at The Brewery in Stockholm. The cost of attending is included in the registration fee. Additional tickets can be purchased for partners at SEK 300.

Gala Dinner

Experience the beginning of the blasting industry by visiting Alfred Nobel's incredible Winterviken factory.

The evening will transport you to the beginnings of the industry with a look at the incredible Swedish innovator and chemist, Alfred Nobel. The dinner will take place at Winterviken, Alfred Nobel's factory, a superb building that dates back to 1891 with wooden beams and classic features.

The evening includes a cabaret performance with spectacular backdrops and singers and includes a luxurious Swedish menu paired with local wines prepared by one of Sweden's most reputed chefs – Markus Aujalay.

Entry includes: welcome drink, 3 course meal, wine, coffee and entertainment.

Tickets are available to purchase through the registration process.

Activities

Open Top Bus Tour

Hop on and off as many times as you like. The ticket is valid 24h and takes you to the city's most famous sights. Comfortably seated in an open top double deck bus you are guided by headphones. Buy the ticket on board or online.

To view the timetable or place your booking please visit: www.opentoptours.com

Guided Bicycle Sightseeing Tour

Guided tour by bike where you will experience Stockholm from its most beautiful side. See the city gems, famous landmarks and viewpoints. During the afternoon tour more time is spent in the National City Park and less time in the city. Language: English.

Point of departure is Narvavägen 17-19 (at the Historical Museum) on the following dates and times

1/9-14/9 Wed-Sun 11am & 3.30pm Prices from 300 SEK

To view the timetable or place your booking please visit: www.bikesweden.se

Old Town and Riddarholmen Tour

Fancy a walking tour in the historical heart of Stockholm? See the most famous sights such as the Royal Palace, the narrowest alley and St George and the Dragon. The tour includes a visit to the island of Riddarholmen, with a stunning view of Lake Mälaren and the lakeside of the city.

Limited space. Language: English. Tour depart daily during September at 2pm.

Tour length 1,5h. Meeting Point: Stortorget, the Old Town.

Price: 150 SEK

Booking is available on the Stockholm Our Way website: www.stockholmourway.com

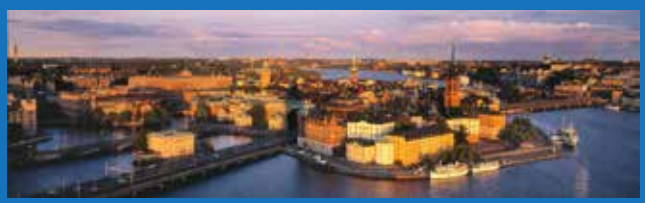

Boat Trip to Drottningholm Palace

Board a century-old steamer and sail to world heritage site – Drottningholm, the private residence of the Swedish Royal Family. Travel time 50 minutes on Lake Mälaren offering beautiful scenery.

Tour length 3h Prices from 270 SEK

To view the timetable or place your booking please visit: www.strommakanalbolaget.se

Travel by Air

Stockholm Arlanda Airport, located North of Stockholm, serves as a base for domestic and international flights. https://www.swedavia.com/arlanda/

Travel by Airport Shuttle

The most convenient way to travel from Arlanda airport to central Stockholm is via the Arlanda Express. Tickets can be purchased in advance via their website https://www.arlandaexpress.com/

Tickets cost 280 SEK each way.

Flight journey lengths:

- 2 hours 40 minutes from Paris
- 2 hours 15 minutes from London
- 8 hours from New York

Further flight information please visit: http://www.skyscanner.net/

Travel by Public Transport

Public transport is relatively inexpensive and useful for negotiating the city's islands and historical sites. The fastest way to get around is by metro, which covers most of the city.

Stockholm information

Stockholm is Sweden's capital city and the centre of its culture, media and economy.

This beautiful city is often referred to as the 'Venice of the North' as the city is spread across 14 coastal islands connected by 57 bridges at the mouth of Lake Malaren, by the Stockholm archipelago and the Baltic Sea. In 2010 the city was granted the European Green Capital Award in recognition of it being one of the cleanest capitals in the world.

Stockholm was first recognised as a city in 1252, although, it is thought to have been a settlement since the Stone Age. The city's oldest section is Gamla stan (Old Town), located on the original small islands of the city's earliest settlements.

Stockholm is of course the home of Alfred Nobel and a thriving blasting industry which we will be taking full advantage of during the conference programme.

More recently Stockholm has become famous for its software industry, fine seafood and famous summer music festivals.

For further information please visit www.visitstockholm.com

www.efee2017.com

Rates

	Item	Amount
Early Bird Discount Registration before 31 July 2017	Early Bird Conference registration for **NON EFEE Members**	kr. 6,800.00
	Early Bird Conference registration for **EFEE Members** (individual/corporate) and those applying for EFEE Membership	kr. 6,100.00
	Early Bird Conference registration for **Students**	kr. 500.00
	Early Bird Conference registration for **EFEE National Members** (one discounted registration, per membership)	kr. 5,440.00
Registration from 1 August 2017	Conference registration for **NON EFEE Members**	kr. 7,820.00
	Conference registration for **EFEE Members** and those applying for EFEE Membership	kr. 7,015.00
	Conference registration for **Students**	kr. 500.00
	Conference registration for **EFEE Corporate Members** (one discounted registration, per membership)	kkr. 6,256.00
Gala Dinner	Gala Dinner tickets include half a bottle of wine per person and entertainment	kr. 1,100.00
Welcome Drinks Reception	Additional tickets to the Welcome Drinks Reception	kr. 300.00
Proceedings	Printed Proceedings	kr. 785.00
	USB Proceedings	kr. 600.00
Sunday Workshop	Tickets for EFEE Members	kr. 1,450.00
	Tickets for NON EFEE Members	kr. 1,950.00
EFEE Membership	One year individual membership	kr. 750.00

The above rates exclude Swedish VAT. Please contact us for information regarding reclaiming VAT.

Booking Information

EFEE Members

EFEE members qualify for a discounted conference registration package. The cost to become an EFEE member is just SEK 750 for professionals and SEK 250 for students. EFEE membership can be purchased during the registration process which will immediately allow you to take advantage of the discounted rates.

EFEE Corporate Members

If your organisation is an EFEE Corporate Member the company qualifies for one discounted delegate registration.
Any further bookings must be completed at the standard member registration rate.

EFEE National Members

EFEE National Members also qualify for one discounted delegate registration. Any further bookings must be completed at the standard member registration rate.

Students

Take advantage of our competitive student registration packages. Your Student reference number will be required during the registration process.

EFEE Membership – Join EFEE to take advantage of the discounted conference rate. Membership is available to purchase during the registration process.

Register before 31st July to take advantage of our early bird offers.

Book online today: www.efee2017.com

Gold Sponsors

www.orica.com

www.epc-groupe.co.uk

www.lubrizol.com

www.forcit.fi

www.yara.com/UltrAN

www.maxam.net

Silver Sponsors

www.daveybickford.com

www.sigicom.com

www.akzonobel.com/expancel

Technical Papers

A range of abstract have been submitted to our technical committee for approval including:

Blast Vibration and Seismology

- Blast induced vibrations in Malmberget
- Blast Pattern Expansion – A numerical approach
- Close Range Blasting in Adverse Geotechnical Conditions
- Controlled Blast Vibrations on the third set of locks: Panama Canal Expansion Program
- Improved Logistical Efficiencies through Vertical Emulsion Pipelines
- Misfire detection using Wavelet Transforms of Blast Seismograms
- Modern theory = Flexible blasting = Low vibrations
- Prediction of Blasting Damage based on Measurement While Drilling technique
- Response Spectrograms in Ground Vibration Analysis
- Testing of a full-scale building under external blast
- The development of a new geometrical blast fragmentation model and its application to Grade Engineering
- The influence of charge confinement on vibration level in blasting
- Underground Blasting Optimization: Maximum Advance and Minimum Damage

Blasting Work Experiences

- Blasting close to a substation with a low threshold value. Test blasts, vibration prediction and execution of rock excavations
- Comparative assessment of the application of non-electric and electronic initiation systems in open pit mining: A case study
- Controlled blasting at the Diversional Dam, Snohomish County, WA
- Controlled Explosive Demolition of a mineral processing plant at Mantoudi, Greece. Stage 2 of the Project: Rotary Kilns facilities
- Detonation performance of novel hydrogen peroxide and nitrate based hybrid explosives
- Dynamic response of a Defective Slope Subjected to Open-pit to Underground Mining Blasting
- Extraction of contiguous seam and overburden using Through Seam Blasting Technique
- High speed video comparison of non-ideal explosive detonation using cylindrical and rectangular shaped charges
- Water Blasting of Steel Box Stanchions

Construction Blasting

- Control of blast induced overbreak in tunnelling projects of Himalayas, India
- Study on numerical calculation and application of blasting of tunnel excavation

EU Directives and Harmonisation Work

- Ammonium Nitrate; REACH and EU Precursor regulation
- More than Track and Trace – new advantages of Track and Trace software

Health, Safety and Environment

- Best Practices Guide for Urban Blasting Operations
- Effect of sample selection, transport and storage on Reactive Ground Test Results
- Evaluation of excavation damaged zone characterization methods in nuclear waste disposal facility in Finland
- Repackaging of explosives: A task not anticipated in the Danish regulations
- Reporting system and database for blasting related incidents – another value adding EFEE project
- Toxic fumes from detonation of emulsion explosives

Blast Design Management

- Blast Management Plan in Gol-e-Gohar Iron Ore Mine, Iran
- Classification of the requirements for Blast Design
- Cloud Scanning and Photogrammetry – A comparison of Blast Face Surveying Techniques
- Shock Physics Computer Modelling of Air-Deck behaviour during rock blasting

New Applications and Training

- Utilization of Aerial Drones to Optimize Blast and Stockpile Fragmentation

Quarry Experience

- Estimating effect of underground vibrations on the stability of Highwall in a Limestone Quarry
- Investigation of particle size distribution of muckpile in a Dolomite Quarry

Technical Development

- A case study to determine the blast efficiency in sublevel caving methods via mining software
- A new approach to blasting services contracts
- A new era of Blast Initiation Systems reducing safety risks, costs and enabling automation
- Cutoff in surface delays due to flyrock
- Economic losses in pit productivity versus yield from fines reduction in aggregate operations
- Experimental evaluation of stemming performance in surface blasting
- Explosive cutting of pipelines for the determination of materials properties
- Influence of stemming length, initiation sequence and energy distribution on rock movement and selectivity during a blast
- Innovation in up holes deviation measurements in sublevel stopping mines
- Ring Blasting Mine to Mill Optimisation
- Ring Blasting Modelling and Optimisation
- Stabilization of emulsion explosives utilizing optimized co-surfactant systems - Increased efficiency